1

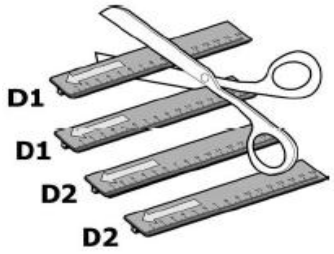

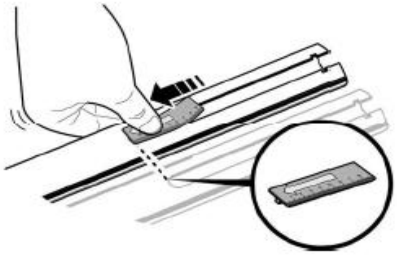

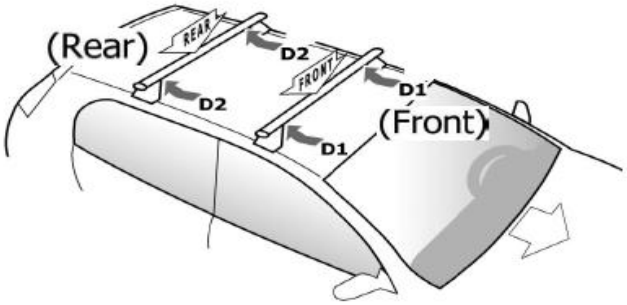

MANUFACTURER	MODEL CAR	DOORS	MODEL YEAR	D1	D2
CITROEN	*Xsara*	*5*	*97>06*	*5,8*	*4,6*
NISSAN	*Almera (N15)*	*5*	*95>00*	*7,2*	*7,2*
NISSAN	*Almera (N16)*	*5*	*00>03*	*5,9*	*5,4*
NISSAN	*Almera Tino*	*5*	*00>06*	*12,4*	*11,4*
NISSAN	*Terrano 2*	*5*	*95>05*	*12,5*	*11,7*
RENAULT	*Clio II*	*5*	*98>05*	*4,0*	*4,6*
RENAULT	*Clio Storia/Campus*	*5*	*05>12*	*4,0*	*4,6*

2

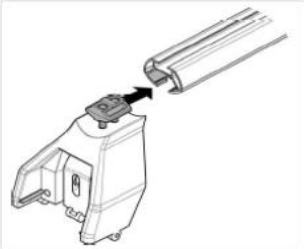

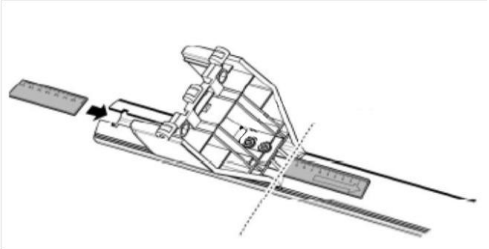

x4

3

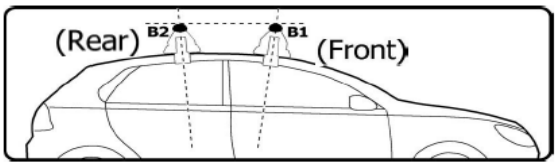

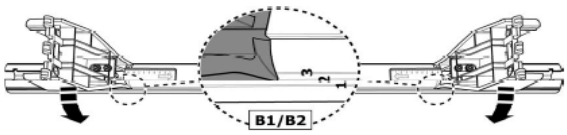

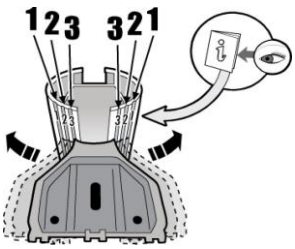

MANUFACTURER	MODEL CAR	DOORS	MODEL YEAR	B1	B2
CITROEN	*Xsara*	*5*	*97>06*	*1*	*2*
NISSAN	*Almera (N15)*	*5*	*95>00*	*2*	*2*
NISSAN	*Almera (N16)*	*5*	*00>03*	*1*	*2*
NISSAN	*Almera Tino*	*5*	*00>06*	*1*	*2*
NISSAN	*Terrano 2*	*5*	*95>05*	*2*	*2*
RENAULT	*Clio II*	*5*	*98>05*	*2*	*2*
RENAULT	*Clio Storia/Campus*	*5*	*05>12*	*2*	*2*

4

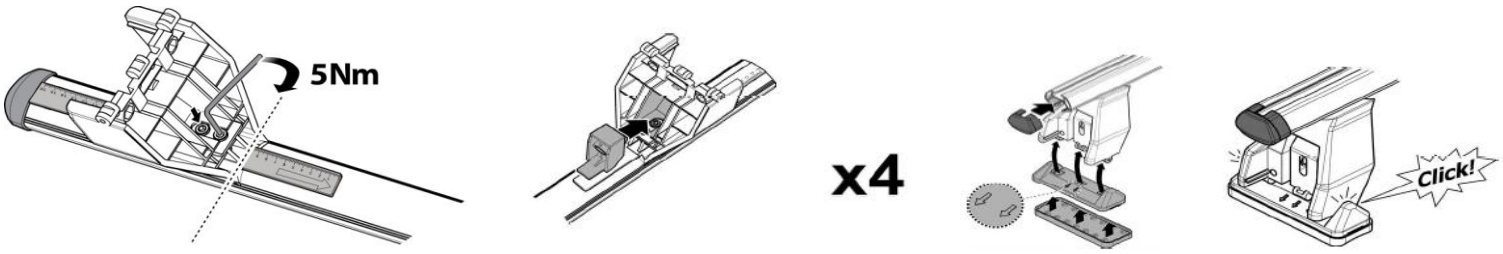

5

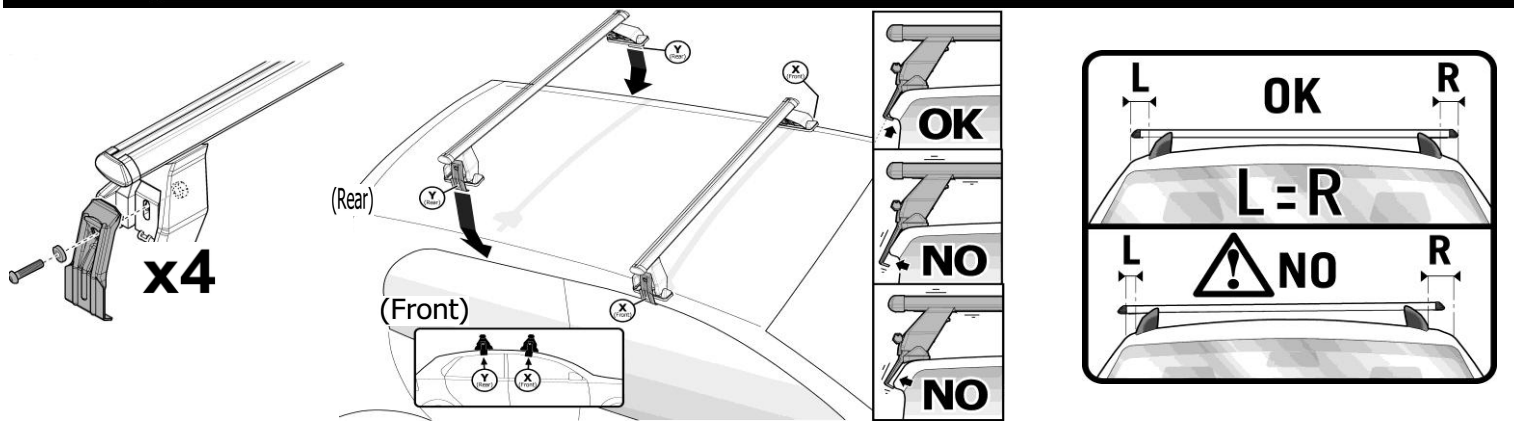

6

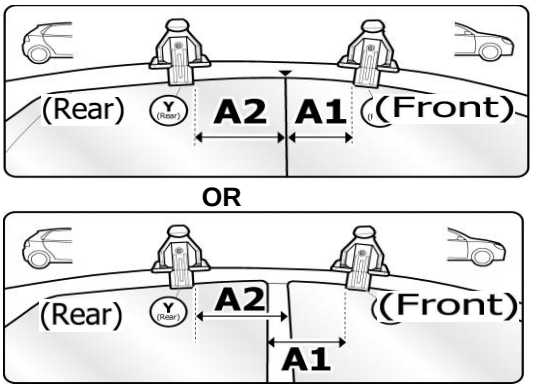

MANUFACTURER	MODEL CAR	DOORS	MODEL YEAR	A1	A2
CITROEN	*Xsara*	*5*	*97>06*	*X*	*X*
NISSAN	*Almera (N15)*	*5*	*95>00*	*27*	*33*
NISSAN	*Almera (N16)*	*5*	*00>03*	*25*	*45*
NISSAN	*Almera Tino*	*5*	*00>06*	*23*	*40*
NISSAN	*Terrano 2*	*5*	*95>05*	*18*	*42*
RENAULT	*Clio II*	*5*	*98>05*	*X*	*X*
RENAULT	*Clio Storia/Campus*	*5*	*05>12*	*X*	*X*

X = predisposizione originale /original arrangement