1

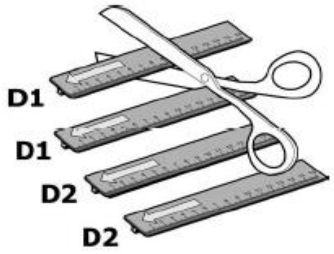

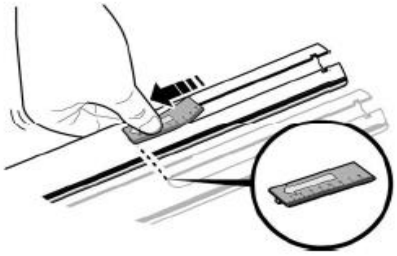

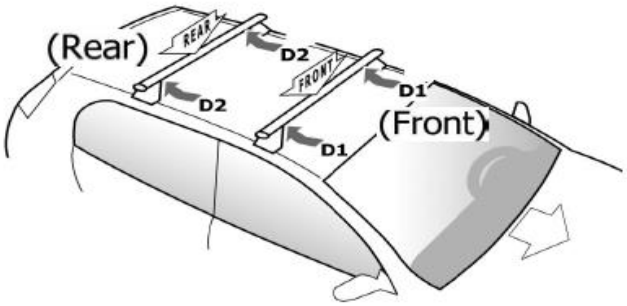

MANUFACTURER	MODEL CAR	DOORS	MODEL YEAR	D1	D2
FORD	*B-Max*	*5*	*12>*	*7,4*	*6,3*

2

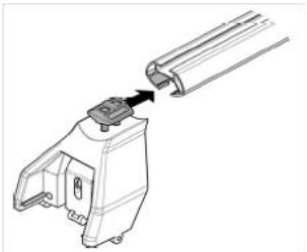

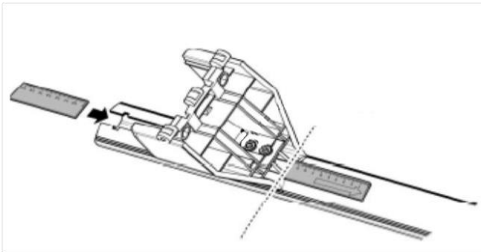

x4

3

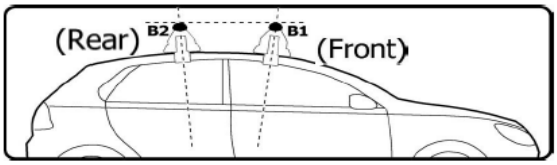

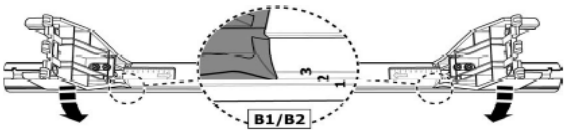

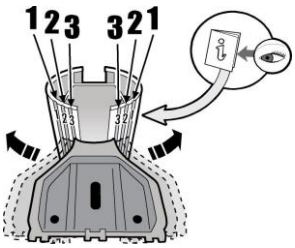

MANUFACTURER	MODEL CAR	DOORS	MODEL YEAR	B1	B2
FORD	*B-Max*	*5*	*12>*	*1*	*2*

4

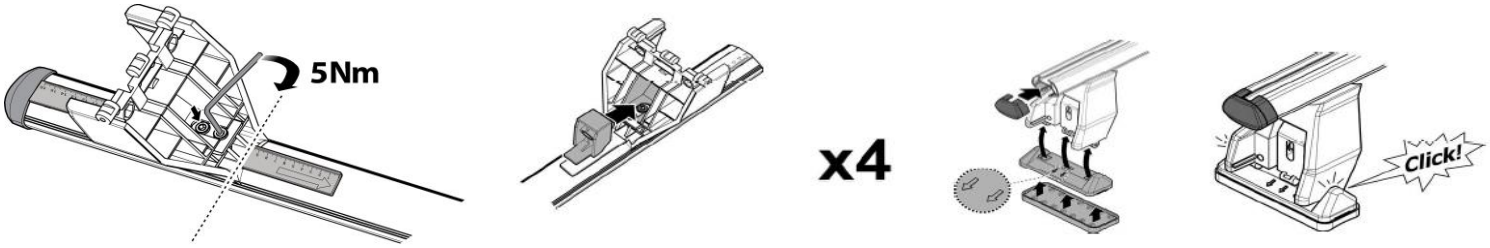

5

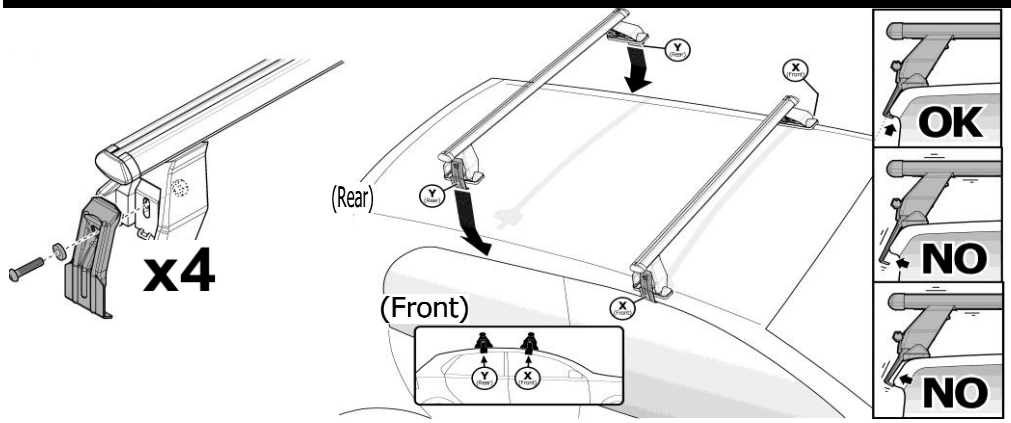

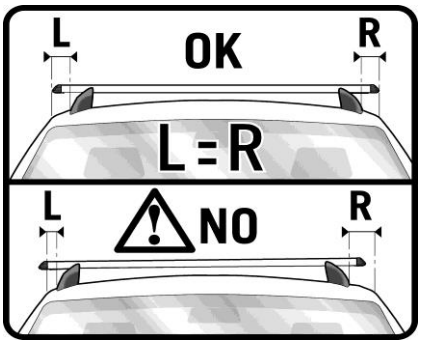

6

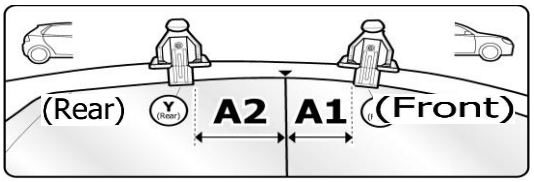

OR

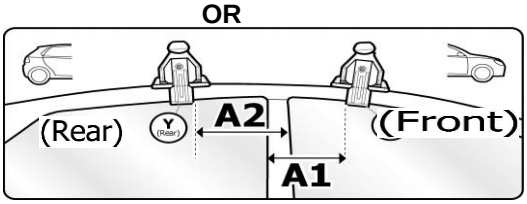

MANUFACTURER	MODEL CAR	DOORS	MODEL YEAR	A1	A2
FORD	*B-Max*	*5*	*12>*	*25*	*33*

X = predisposizione originale /original arrangement